Tolerance	
0,00	± 0,05
0,0	± 0,10
0,	±
ANGLE	±1°

ITEM NO: DV-PCT415

Size: mm

Scale: 1:1

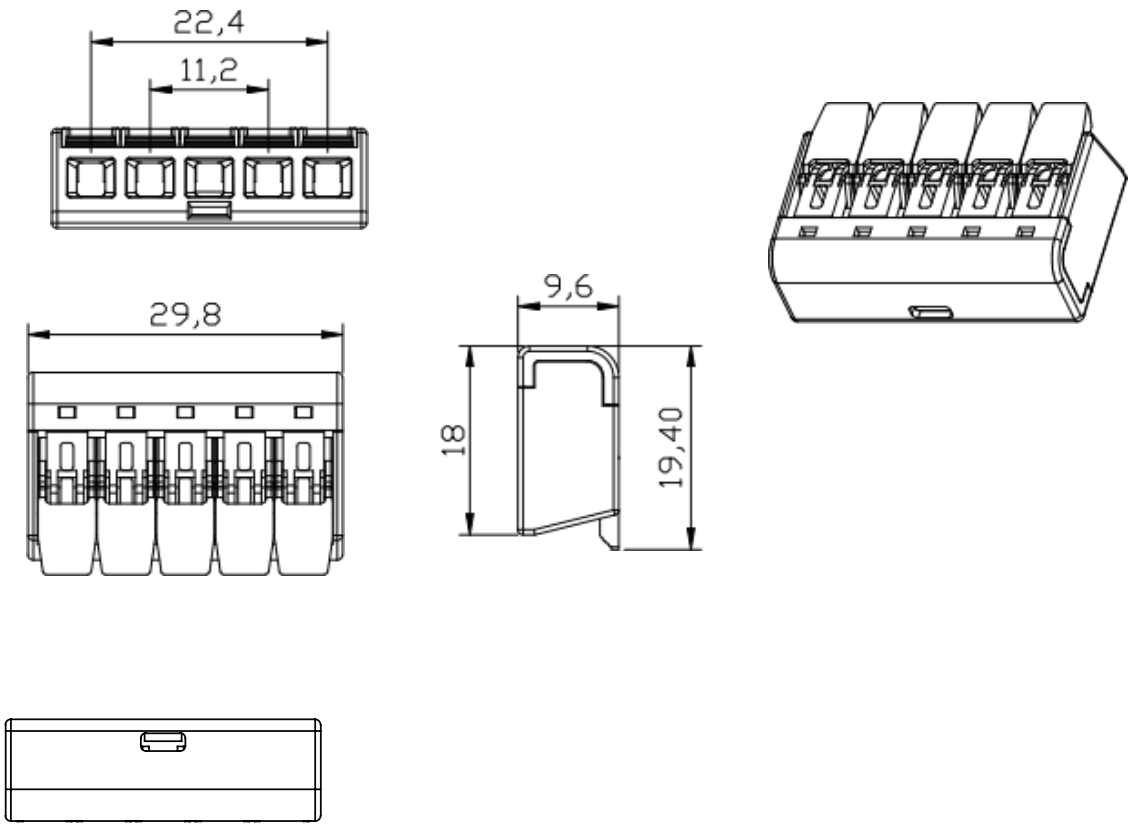

Item No.	DV-PCT415
Item Name	Wire Connector
Rated Voltage	450V
Rated Current	26A
Wire Range	Solid Wire 0.2mm²-4.0mm²
	Stranded Wire 0.14mm²-2.5mm²
Strip Length	10-12mm/0,47in
Operating Temperature	-20C° — 105C°
Holes	5
Plastic material	FR nylon
Contact Material	Pure Copper
Spring Material	Stainless Steel